Altech Corp.®

Quality System

Quality Endorsed Company

Altech® by KATKO

UL98 Disconnect Switches

UL98 Motor Disconnect Switch - Extended

- Every design is lockable in OFF position
- Switching mechanism speed is independent from the operator
- Silver contacts ensure safe and durable operation

E506049

4 Pole disconnect switch shown with optional 3 pole touch protector

Catalog Number	KU330UL98		KU360UL98		KU3100UL98	
No. of Poles*	3 (4 pole - KU430UL98)		3 (4 pole - KU460UL98)		3 (4 pole - KU4100UL98)	
General Purpose Current	30 A		60 A		100 A	
Maximum Voltage	600V AC		600V AC		600V AC	
Horsepower Rating /HP	1 Phase	3 Phase	1 Phase	3 Phase	1 Phase	3 Phase
120V AC	2	1	5	–	5	–
240V AC	5	15	7 1/2	20	10	25
480V AC	5	30	–	40	–	50
600V AC	5	50	–	60	–	75
Short Circuit Withstand Rating at 600 V with Max. Fuse Size/Class:	50 kA/30 A Class J		50 kA/60 A Class J		50 kA/100 A Class J	
Terminal Size Acceptability and Torque (Cu Conductors only, 75°C)	14 – 10 AWG: 35 lb. in. (4.0 Nm) 8 – 1/0 AWG: 65 lb. in. (7.3 Nm)		14 – 10 AWG: 35 lb. in. (4.0 Nm) 8 – 1/0 AWG: 65 lb. in. (7.3 Nm)		14 – 10 AWG: 35 lb. in. (4.0 Nm) 8 – 1/0 AWG: 65 lb. in. (7.3 Nm)	
Screw Head Type	4mm Allen Key		4mm Allen Key		4mm Allen Key	

Dimensions

(to convert to inches multiply by 0.03937)

NOTE: Optional touch protectors shown in light blue.

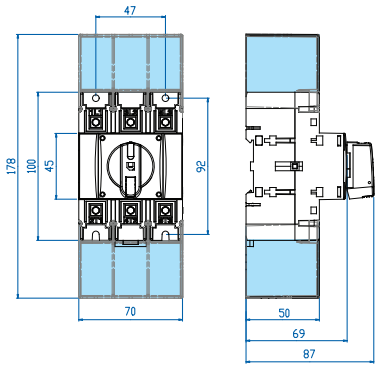

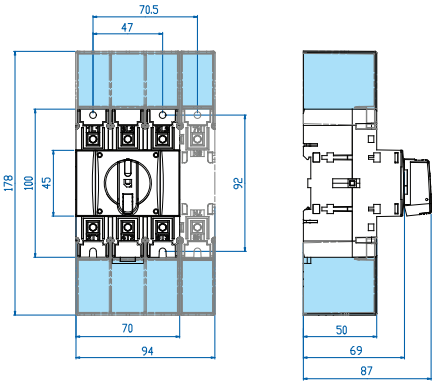

Weight	0.45 kg (4 pole 0.59 kg)	0.45 kg (4 pole 0.59 kg)	0.45 kg (4 pole 0.59 kg)

Suitable Accessories

DOOR INTERLOCK HANDLES

Lockable with up to 3 padlocks. Lockable with up to 3 padlocks.

Cat. No.	LK10 UL	LK10 Y/R UL	LK11 U	LK11 Y/R U
Environmental Rating UL (IEC)	UL Type 4X (IP66)		UL Type 4X (IP67)	
Color	Black	Yellow/Red	Black	Yellow/Red

SIDE MOUNTED AUXILIARY SWITCHES

Cat. No.	1.V160KU	2.V160KU
No. if Contacts	1n.o./1n.c.	2n.o./2n.c.
Electrical Rating	16 A/1/2HP/125-250V AC	

DOOR INTERLOCK SHAFT

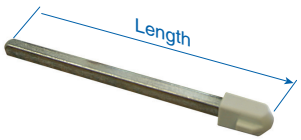

Cat. No.	L100 AD11-ST	L200 AD11-ST	L300AD11-ST
Length (L)	100 mm	200 mm	300 mm
Material	Steel	Steel	Steel

3 Pole

1 Pole

BLUE TOUCH PROTECTOR

Cat. No.	LS/VS 160 3P	LS/VS N160
Poles	3	1

* 6 and 8 pole versions along with changeover version available upon request.

UL98 Motor Disconnect Switch - Sheet Metal Enclosure

- Can be used locally at the motor
- UL Type 4
- Excellent in harsh weather conditions
- Resistant to many chemicals
- Corrosion and UV resistant
- IEC IP65 Protection Level
- Lockable - Defeatable Handle

E502897

All Models are lockable with up to 3 padlocks.

Catalog Number - Black Handle - Yellow/Red Handle	KET330UL98 KET330UL98 Y/R		KET360UL98 KET360UL98 Y/R		KET3100UL98 KET3100UL98 Y/R	
No. of Poles	3 (4 pole - KET430UL98 (Y/R))		3 (4 pole - KET460UL98 (Y/R))		3 (4 pole - KET4100UL98 (Y/R))	
General Purpose Current	30 A		60 A		100 A	
Maximum Voltage	600V AC		600V AC		600V AC	
Horsepower Rating /HP	1 Phase	3 Phase	1 Phase	3 Phase	1 Phase	3 Phase
120V AC	2	1	3	–	5	–
240V AC	5	15	7.5	20	10	25
480V AC	5	30	–	40	–	50
600V AC	5	50	–	60	–	75
Short Circuit Withstand Rating at 600 V	50 kA/60 A Class J		50 kA/60 A Class J		50 kA/100 A Class J	
Terminal Size Acceptability and Torque (Cu Conductors only, 75°C)	14 – 10 AWG: 35 lb. in. (4.0 Nm) 8 – 1/0 AWG: 65 lb. in. (7.3 Nm)		14 – 10 AWG: 35 lb. in. (4.0 Nm) 8 – 1/0 AWG: 65 lb. in. (7.3 Nm)		14 – 10 AWG: 35 lb. in. (4.0 Nm) 8 – 1/0 AWG: 65 lb. in. (7.3 Nm)	
Screw Head Type	4mm Allen Key		4mm Allen Key		4mm Allen Key	
Dimensions & Size *(to convert to inches multiply by 0.03937)*	TR01		TR01		TR02	

TR01

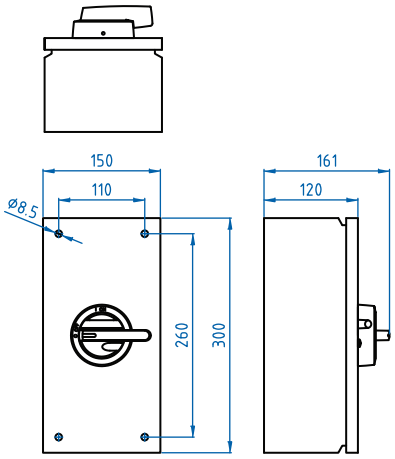

TR02

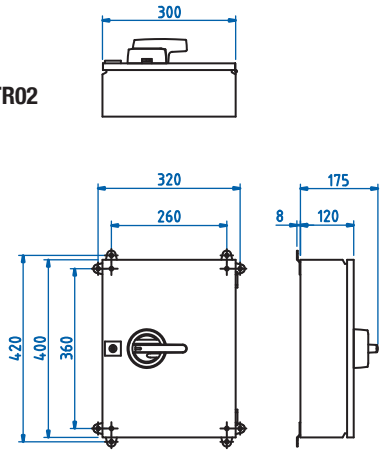

Weight	4.3 kg	4.4 kg	9.7 kg	9.8 kg

Suitable Accessories

AUXILIARY SWITCHES

Cat. No.	1.V160KU	2.V160KU
No. if Contacts	1n.o./1n.c.	2n.o./2n.c.
Electrical Rating	16 A/1/2HP/125-250V AC	

UL98 Motor Disconnect Switch - Stainless Steel Enclosure

- Can be used locally at the motor
- UL Type 4X
- Ideal where chemicals are used for cleaning and maintenance such as food processing and breweries
- Mining is another application area
- Stainless Steel (Grade AISI 316)
- Corrosion Resistant
- IEC IP65 Protection Level
- Lockable - Defeatable Handle

E502897

All Models are lockable with up to 3 padlocks.

Catalog Number	KER330UL98		KER360UL98		KER3100UL98	
- Yellow/Red Handle	KER330UL98		KER360UL98		KER3100UL98	
- Black Handle	KER330UL98 Y/R		KER360UL98 Y/R		KER3100UL98 Y/R	
No. of Poles	3 (4 pole - KER430UL98 (Y/R))		3 (4 pole - KER460UL98 (Y/R))		3 (4 pole - KER4100UL98 (Y/R))	
General Purpose Current	60 A		60 A		100 A	
Maximum Voltage	600V AC		600V AC		600V AC	
Horsepower Rating /HP	1 Phase	3 Phase	1 Phase	3 Phase	1 Phase	3 Phase
120V AC	2	1	3	–	5	–
240V AC	5	15	7.5	20	10	25
480V AC	5	30	–	40	–	50
600V AC	5	50	–	60	–	75
Short Circuit Withstand Rating at 600 V	50 kA/60 A Class J		50 kA/60 A Class J		50 kA/100 A Class J	
Terminal Size Acceptability and Torque (Cu Conductors only, 75°C)	14 – 10 AWG: 35 lb. in. (4.0 Nm) 8 – 1/0 AWG: 65 lb. in. (7.3 Nm)		14 – 10 AWG: 35 lb. in. (4.0 Nm) 8 – 1/0 AWG: 65 lb. in. (7.3 Nm)		14 – 10 AWG: 35 lb. in. (4.0 Nm) 8 – 1/0 AWG: 65 lb. in. (7.3 Nm)	
Screw Head Type	4mm Allen Key		4mm Allen Key		4mm Allen Key	
Dimensions & Size *(to convert to inches multiply by 0.03937)*	H01		H01		H02	

H01

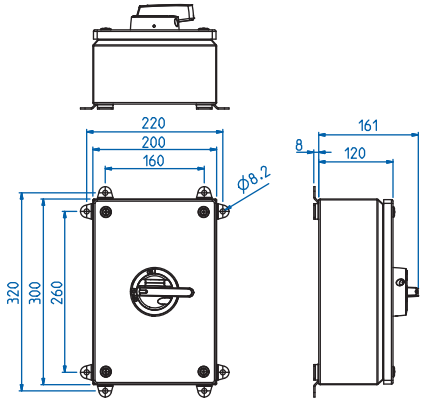

H02

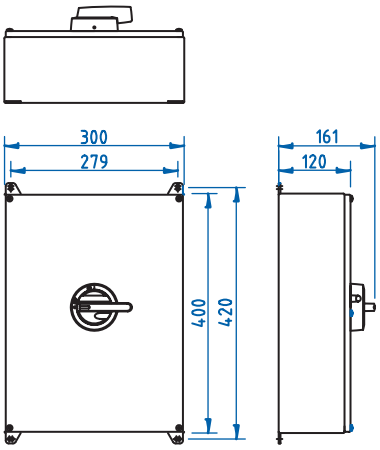

Weight	3.3 kg	3.4 kg	6.9 kg	7.0 kg

Suitable Accessories

AUXILIARY SWITCHES

Cat. No.	1.V160KU	2.V160KU
No. if Contacts	1n.o./1n.c.	2n.o./2n.c.
Electrical Rating	16 A/1/2HP/125-250V AC	

UL98 Motor Disconnect Switch - Polycarbonate Enclosure

- Can be used locally at the motor
- UL Type 4X
- IEC IP65 Protection Level
- UV resistant
- Resistant to many chemicals
- Lockable - Defeatable Handle

E502897

All Models are lockable with up to 3 padlocks.

Catalog Number - Yellow/Red Handle - Black Handle	KEM330UL98 KEM330UL98 Y/R		KEM360UL98 KEM360UL98 Y/R		KEM3100UL98 KEM3100UL98 Y/R	
No. of Poles	3 (4 pole - KEM430UL98 (Y/R))		3 (4 pole - KEM460UL98 (Y/R))		3 (4 pole - KEM4100UL98 (Y/R))	
General Purpose Current	60 A		60 A		100 A	
Maximum Voltage	600V AC		600V AC		600V AC	
Horsepower Rating /HP	1 Phase	3 Phase	1 Phase	3 Phase	1 Phase	3 Phase
120V AC	2	1	3	–	5	–
240V AC	5	15	7.5	20	10	25
480V AC	5	30	–	40	–	50
600V AC	5	50	–	60	–	75
Short Circuit Withstand Rating at 600 V	50 kA/60 A Class J		50 kA/60 A Class J		50 kA/100 A Class J	
Terminal Size Acceptability and Torque (Cu Conductors only, 75°C)	14 – 10 AWG: 35 lb. in. (4.0 Nm) 8 – 1/0 AWG: 65 lb. in. (7.3 Nm)		14 – 10 AWG: 35 lb. in. (4.0 Nm) 8 – 1/0 AWG: 65 lb. in. (7.3 Nm)		14 – 10 AWG: 35 lb. in. (4.0 Nm) 8 – 1/0 AWG: 65 lb. in. (7.3 Nm)	
Screw Head Type	4mm Allen Key		4mm Allen Key		4mm Allen Key	
Dimensions & Size *(to convert to inches multiply by 0.03937)*	MF10		MF10		MF11UL	

MF10

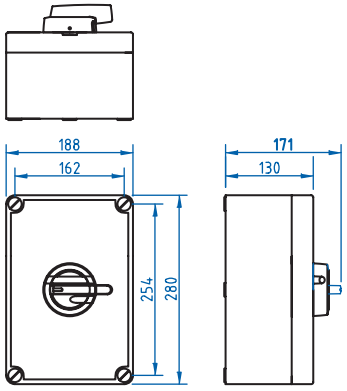

MF11UL

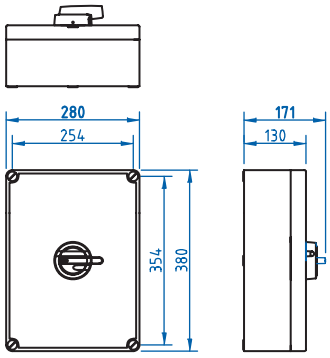

Weight	2.4 kg	3.3 kg	2.5 kg	3.4 kg

Suitable Accessories

AUXILIARY SWITCHES

Cat. No.	1.V160KU	2.V160KU
No. if Contacts	1n.o./1n.c.	2n.o./2n.c.
Electrical Rating	16 A/1/2HP/125-250V AC	

Altech® by KATKO

We have a full line of High Quality Disconnect Switches & Accessories.

FEATURES AND BENEFITS:

- One of the smallest 80 A switches in the industry
- Advanced switch technology
  (use of silver contacts ensures safe and durable operation)
- Across the line, motor starting - up to 75 hp/600 V
- General Use Rating - 16 A to 150 A/600 V
- Available as rotary switches for extended or direct handle applications
- Toggle switches
- Non-fused switch
- Short Circuit Withstand Rating of 10 kA with back-up fuse
- DIN Rail and panel mount available
- Comprehensive range of accessories
- Snap on auxiliary contacts
- Enclosed switches have UL Listed Type 4 and/or 4X rating; watertight
- Operating temperature is -20°C to +40°C

UL60947-4-1A (Formerly UL508) Listed Manual Motor Controllers

with Disconnecting Means

c UL us LISTED
E185115

AC Motor Across-The-Line
AC General Use

Altech Corporation
35 Royal Road
Flemington, NJ 08822-6000
P 908.806.9400 • F 908.806.9490
www.altechcorp.com

Altech Corp.® 444UL98-2000
Printed June 2019