32 Terminal

Vertical PCB
Spring Clamp

TECHNICAL INFORMATION

Electrical:
10A, 300V, 26-14 AWG

Housing Material:
Glass-filled Polycarbonate

Temperature Range:
Up to 125°C (257°F)

Flammability Rating:
UL94 V-O

Color:
Light Gray

Terminal Type:
Spring Cage Clamp

Terminal Screw Size:
–

Recommended Torque:
–

Max. PCB's:
(4) Vertical

Mounting:
35mm DIN Rail or optional panel mounting*

ORDERING INFORMATION

Part Number	Type	Description	PCB Connection
91.580	KU4039B	Right Angle Pins	Machine Solder/ Wire Jumper

ACCESSORIES

Accessories	Part Number	Type
1 Meter DIN Rail	2511120/1M	TS35x7.5/1M
*Panel Mount Tab	93.001.5	PMA/KU

ENCLOSURE DRAWING (To convert to inches divide by 25.4.)

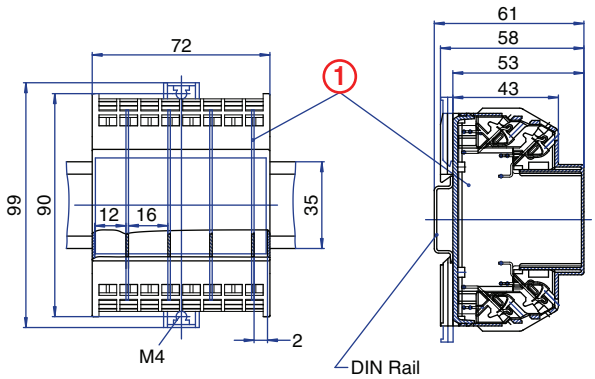

PCB DRAWING (To convert to inches divide by 25.4.)

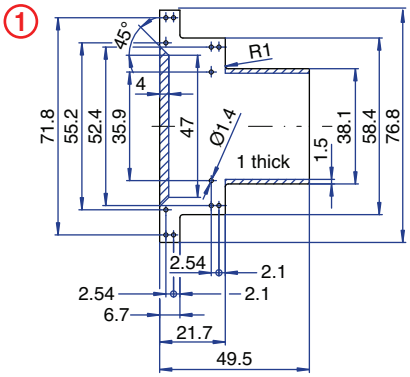

unused space

32 Terminal

Horizontal PCB
Spring Clamp

TECHNICAL INFORMATION

Electrical:
10A, 300V, 26-14 AWG

Housing Material:
Glass-filled Polycarbonate

Temperature Range:
Up to 125°C (257°F)

Flammability Rating:
UL94 V-O

Color:
Light Gray

Terminal Type:
Spring Cage Clamp

Terminal Screw Size:
–

Recommended Torque:
–

Max. PCB's:
(1) Horizontal

Mounting:
35mm DIN Rail or optional panel mounting*

ORDERING INFORMATION

Part Number	Type	Description	PCB Connection
91.560	KU4039C	Straight Pins	Machine Solder

ACCESSORIES

Accessories	Part Number	Type
1 Meter DIN Rail	2511120/1M	TS35x7.5/1M
*Panel Mount Tab	93.001.5	PMA/KU

ENCLOSURE DRAWING (To convert to inches divide by 25.4.)

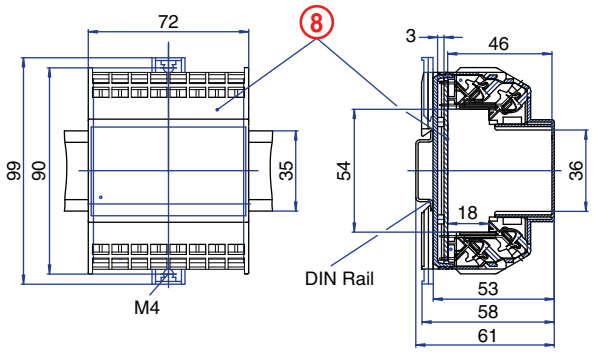

PCB DRAWING (To convert to inches divide by 25.4.)

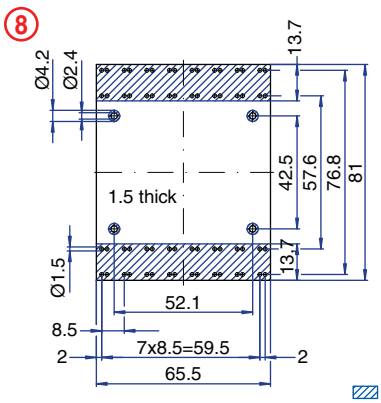

unused space