TKAL3625-11 – Aluminum – 388 x 270 mm (15.28 x 10.63 in.)

NEW

Altech by elsspelsberg

Standard Features

- **Protection Level:** IP66
- **Technical:** Smooth Sidewalls
- **Enclosure Material:** Cast Aluminum, Al Si 12
- **Gasket Material:** Silicone
- **Temperature Range:** -35°C to 80°C (-31°F to 176°F)
- **Color:** Silver Gray, RAL 7001
- **Accessories:** See section below

C UL US PENDING

Aluminum

Ordering Information	Cat. No.	Type	Dimensions mm (in) Length	Width	Height	Std. Pk.
Enclosure	151-012	TKAL3625-11	388 mm (15.28 in)	270 mm (10.63 in)	117 mm (4.61 in)	1

Accessories

Ordering Information	Cat. No.	Type	Std. Pk.
Mounting Plate (plastic)	195-012	TKMPI-3625	1
Mounting Plate (steel)	197-012	TKMPS-3625	1
Hinge Kit Set	154-210	HK-AL	1
DIN Rail TS 35 - 336 mm	198-336	TS35/336	1
Mounting Tab Kit - large	154-006	MT-AL2	1
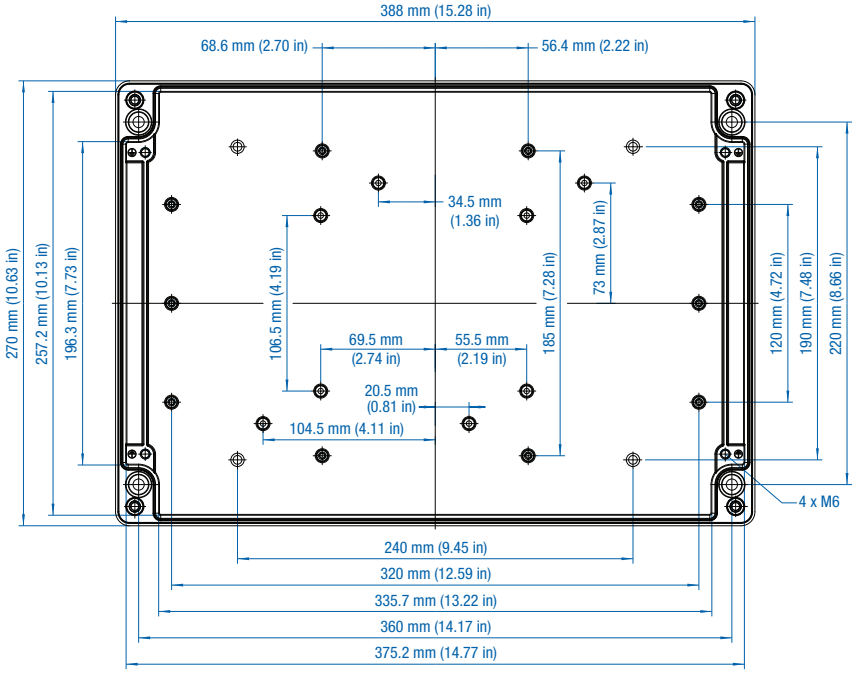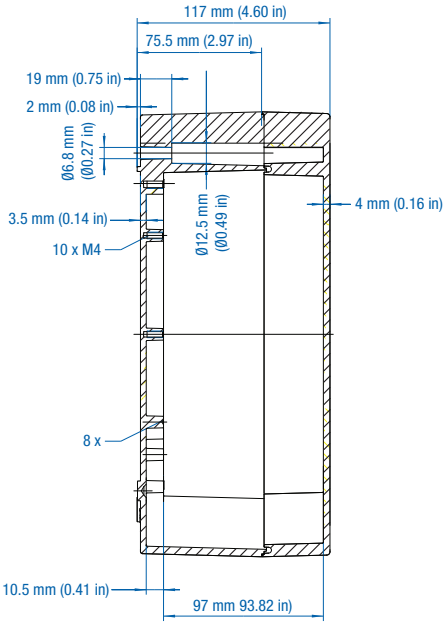
Please refer to pages 149-152 for additional accessories and detailed information.