TG1612-9 – ABS and Polycarbonate – 162 x 122 x 90 mm (6.38 x 4.80 x 3.54 in.)

Standard Features

- **Protection Level:** IP67 (NEMA 4X)
- **Technical:** Smooth Sidewalls
  Gray or Transparent Cover
  Standard or Quick Turn Screws
  135 x 95 x 0.4 mm Recess in Cover
  Integrated Cover Retainer
- **UL Recognized Enclosure Materials:** ABS or Polycarbonate
- **Transparent Cover Material:** Polycarbonate
- **Gasket Material:** Polyurethane
- **Color:** Light Gray
- **Material Temperature Range:** ABS
  -40˚C to 80˚C (-40˚F to 176˚F)
  Polycarbonate
  -40˚C to 120˚C (-40˚F to 248˚F)
- **Accessories:** See section below

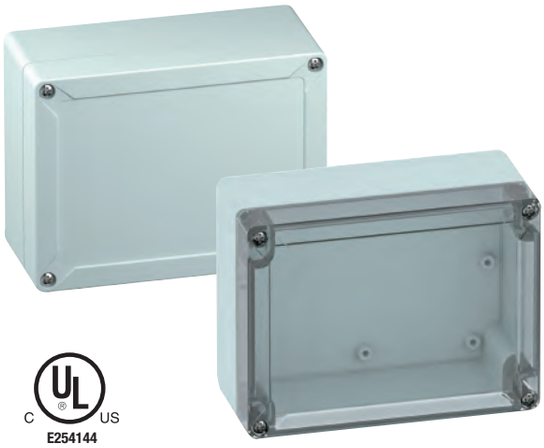

E254144
Polycarbonate with standard screws Only

TG

Ordering Information	Cat. No. w/ Standard Screws	Cat. No. w/ Quick Turn Screws	Type	Dimensions mm (in) Length	Width	Height	Std. Pk.
ABS							
Gray cover	100-407-91	100-407-01	TGABS1612-6-o	162 mm (6.38 in.)	122 mm (4.80 in.)	90 mm (3.54 in.)	1
Transparent cover	101-007-91	101-007-01	TGABS1612-6-to	162 mm (6.38 in.)	122 mm (4.80 in.)	90 mm (3.54 in.)	1
Polycarbonate							
Gray cover	200-407-91	200-407-01	TGPC1612-6-o	162 mm (6.38 in.)	122 mm (4.80 in.)	90 mm (3.54 in.)	1
Transparent cover	201-007-91	201-007-01	TGPC1612-6-to	162 mm (6.38 in.)	122 mm (4.80 in.)	90 mm (3.54 in.)	1

Accessories

Ordering Information	Cat. No.	Type	Std. Pk.
Mounting Plate (plastic)	186-007	TGMPI-1612	1
Mounting Plate (steel)	187-007	TGMPS-1612	1
DIN Rail – TS35-146	198-146	NS35-146	1
DIN Rail - TS15-146	197-146	TS15-146	1
Internal Hinge Kit Set (longside)	182-001	TGISS	1
Mounting Tab Kit	182-002	TGABL	1
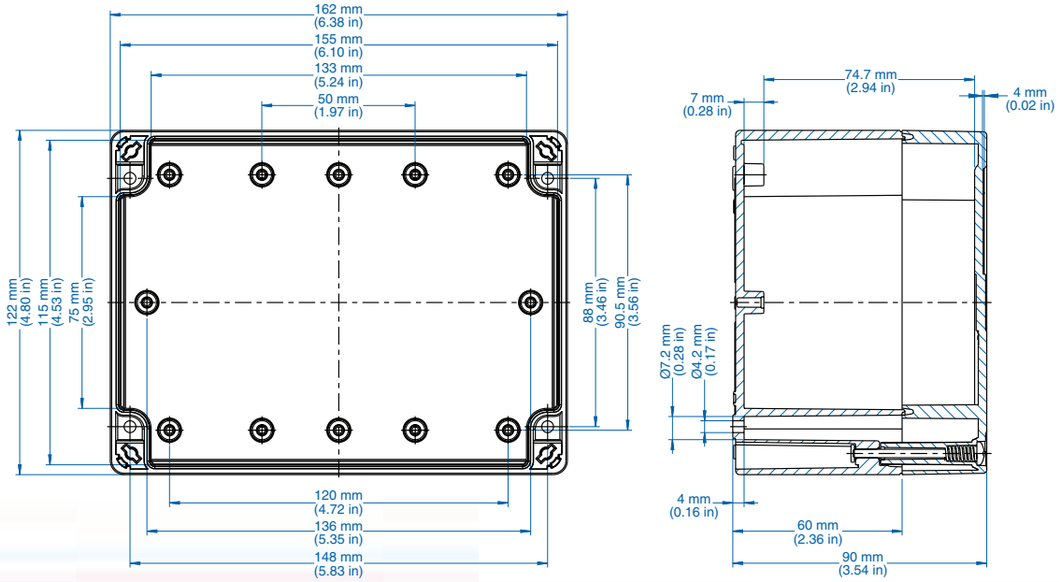
Please refer to pages 149-152 additional accessories and detailed information