PCB Plug-In Connectors

3.50 mm Pin Spacing

- **Vertical Plug**
- **11A Current Rating**
- **Screw Flange**
- **Wire Entry on Rippled Side**

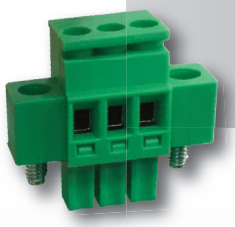

SVPxx-3,50-K

Electrical Ratings

			c UL us E178356		IEC / VDE
Usergroup		B	C	D	-
Rated Voltage		300V	-	300V	160V
Rated Current		11A	-	11A	8A
Wire Size	*solid*	30-14AWG	-	30-14AWG	0.25mm²-1.5mm²
	stranded	30-14AWG	-	30-14AWG	0.25mm²-1.5mm²

Ordering Information *(3.50 mm Spacing)*

No. Poles	Order #	Length (mm)	Std. Pack
2	SVP02-3,50-K	17.4	100
3	SVP03-3,50-K	20.9	100
4	SVP04-3,50-K	24.4	50
5	SVP05-3,50-K	27.9	50
6	SVP06-3,50-K	31.4	50
7	SVP07-3,50-K	34.9	50
8	SVP08-3,50-K	38.4	50
9	SVP09-3,50-K	41.9	50
10	SVP10-3,50-K	45.4	50
11	SVP11-3,50-K	48.9	50
12	SVP12-3,50-K	52.4	50
13	SVP13-3,50-K	55.9	20
14	SVP14-3,50-K	59.4	20
15	SVP15-3,50-K	62.9	20
16	SVP16-3,50-K	66.4	20
17	SVP17-3,50-K	69.9	20
18	SVP18-3,50-K	73.4	20
19	SVP19-3,50-K	76.9	20
20	SVP20-3,50-K	80.4	20
21	SVP21-3,50-K	83.9	20
22	SVP22-3,50-K	87.4	20
23	SVP23-3,50-K	91.9	20
24	SVP24-3,50-K	94.4	20

Dimensions (mm)

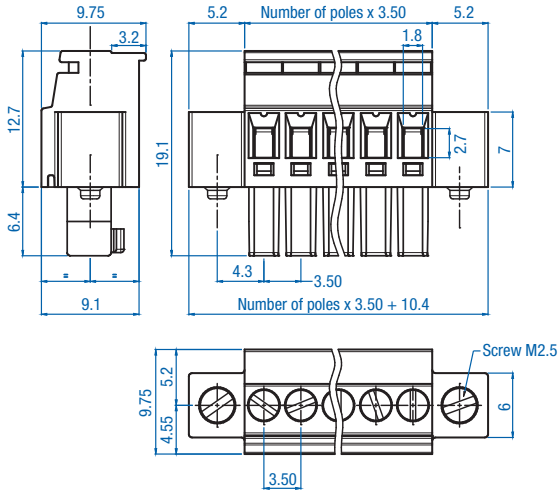

Material Specifications

Screws	Galvanized Steel
Clamp	Nickeled Copper Alloy
Contact Spring	Nickeled Copper Alloy
Insulating Material	Polyamide
Flammability Class	V0 UL94
Operating Temperature	-30°C - +105°C

Installation Data

Screw Size	M2 (terminal), M2.5 (flange)
Torque	0.25Nm (2.3 lb.in.)
Stripping Length	max. 7mm
Clamp Opening	1.8 x 2.7 mm

Mating Headers

Single Row

PVxx-3,50-K	PHxx-3,50-K

Double Row

PDVxx-3,50-V-K	PDVxx-3,50-H-K

Altech Corp.® • 35 Royal Road • Flemington, NJ 08822-6000 • Phone (908)806-9400 • FAX (908)806-9490