Bernstein
Bernstein AG
Postfach 1164
D-32437 Porta Westfalica

Technical data sheet

Bi-SU1Z Riwk | 618.5167.064

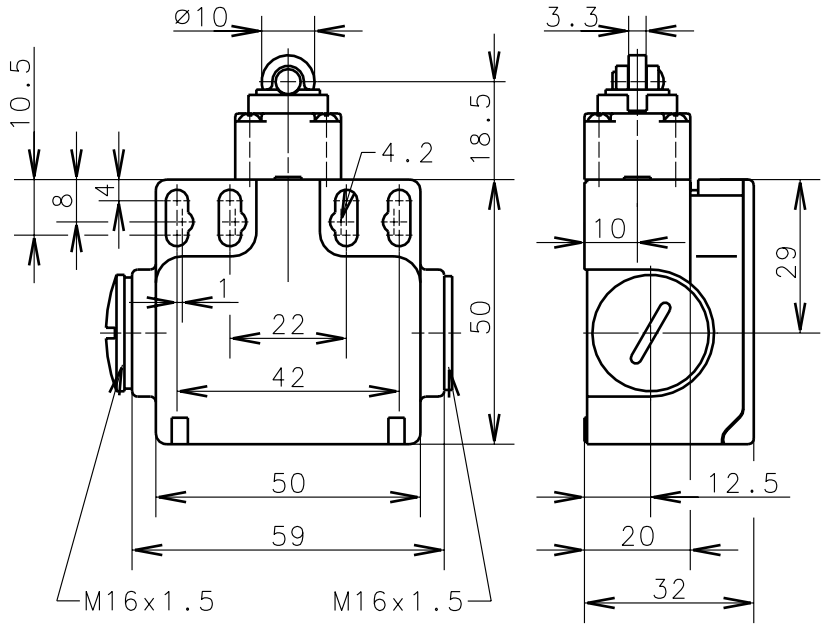

Positive opening operation according to DIN EN 60947-5-1 IEC 60947-5-1

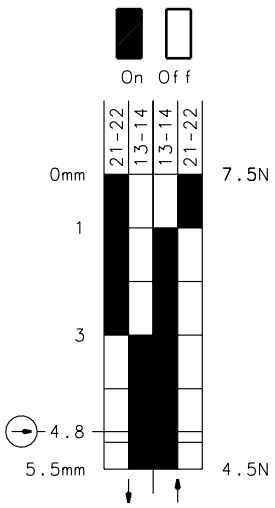

Switching diagram

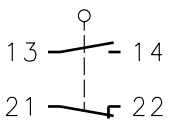

Switching symbol

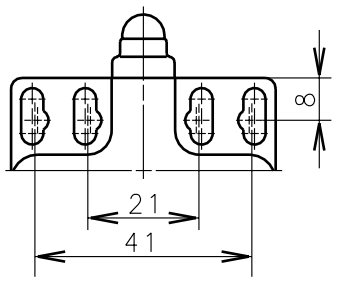

Fixed positioning for safety applications

Mounting screw accord. to DIN 912 M5

Tolerance: Operating point ±0.25mm; actuating force ±10%

Mechanical features

Enclosure:	Thermoplast, glass fiber reinforced
Cover:	Thermoplast, glass fiber reinforced
Actuator:	Roller (Thermoplast)
Ambient air temperature:	-30°C up to +80°C
Contact type:	1 NC-contact, 1 NO-contact (Zb)
Mechanical life:	10×10^6 switch operations
Switch frequency:	max. 100/min
Mounting:	2 x M4
Connection type:	4 screw connectors (M3.5)
Conductor cross-section:	single core 0.5-1.5mm²/litz wire with connector sleeve 0.5-1.5mm²
Cable entry size:	2 x M16x1.5 lateral
Weight:	approx. 0,08 kg

Electrical features

Max. voltage:	500 V AC
Max. enduring current:	I_{the} 10A
Max. inrush current:	accord. to IEC 947-5-1; AC 15; DC 13
Standards:	accord. to VDE 0113, 0660; IEC 947-5-1
Protection class (IP-Code):	IP65 accord. to IEC 529:1989; EN 60529, DIN VDE 0470 T1
CSA:	10A 300V AC, A300 (same polarity)
Short circuit protection:	Fuse 2A gl/gG, IEC/EN 60947-5-1, appendix K

Approach possibilities

By loosening the 4 screws the Actuation Assembly can be rotated in 90 degree increments such that 2 Actuation directions are possible. The Actuation Assembly is to be again fastened to the housing using the 4 screws.

Remarks

The rated protection class (IP-Code) is valid only at closed cover and when using an at least equivalent cable gland.

Schutzvermerk nach DIN 34 beachten
Copyright reserved

29.01.04

Copies are not retreated in case of alternations.