Bernstein
Bernstein AG
Postfach 1164
D-32437 Porta Westfalica

Technical data sheet

SK-UV15Z M | 611.6169.132

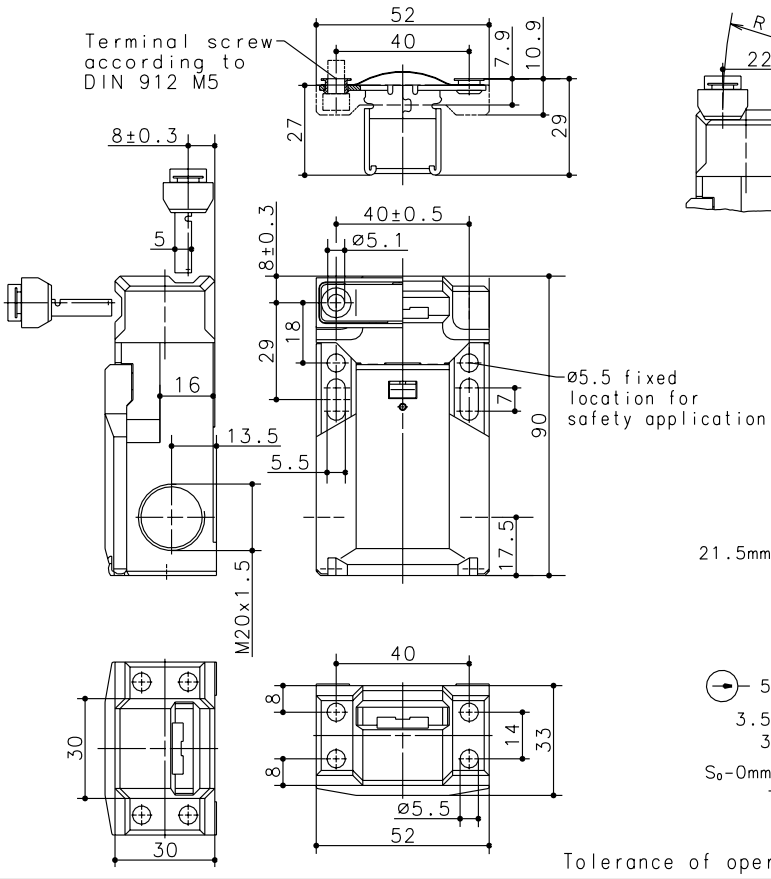

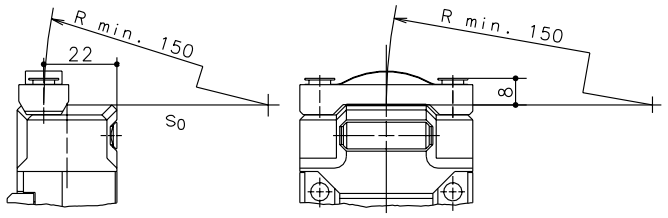

SLSK0210

Positive opening operation according to DIN EN 60947-5-1 IEC 60947-5-1

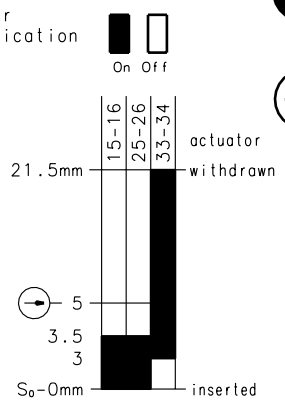

Traction travel

10N

Extraction force

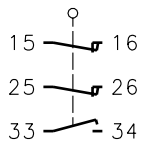

Switch diagram

Tolerance of operation ±0.25mm, Tolerance of operating force ±10%

Mechanical features

Enclosure: Thermoplast, glass fibre reinforced (UL94-V0)
Cover: Thermoplast, glass fibre reinforced (UL94-V0)
Actuator: separate actuator (St-stainless steel)
Ambient air temperature: -30°C up to +80°C
Contact type: 2 NC-contact, 1 NO-contact (Zb)
Mechanical life: $1x10^6$ switch operations
Switch frequency: 30/min
Mounting: enclosure 2xM5, actuator 2xM5
Connection type: 6 screw connections M3
Conductor cross-section: single core 0.5-1.5mm² / litz wire with connector sleeve 0.5-1.5mm²
Cable entry size: 2 x M20x1.5
Weight: approx. 0,15 kg
Mounting position: selectable
Protection class (IP-Code): IP65 according to EN 60529, DIN VDE 0470 T1

The rated protection class (IP-Code) is valid only at closed cover and when using an at least equivalent cable gland.

Electrical features

Rated insulation voltage: U_i= 400V AC B300/ 150V DC R150
Conventional thermal current: I_{the}= 6A AC/ 1A DC
Utilization categorie: AC-15 / DC-13
Short circuit protection: Fuse 6A gl/gG, IEC/EN 60947-5-1, appendix K
CSA: 6A 300V AC, B300 (same pol.)

Approvals

CSA
UL

Standards

VDE 0660 T100, EN 60947-1
VDE 0660 T200, EN 60947-5-1
IEC 60947-5-1
GS-ET 15

Approach possibilities

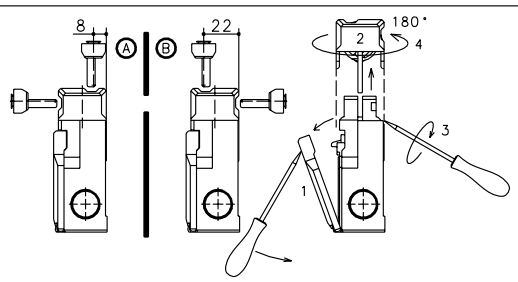

Specials / Remarks

- Turning the cap (pos A/B) allow 4 different directions of drive
- Cover (1) has to be opened before turning the cap (2).
- Insert the screwdriver into the gap between housing and cap and turn until the cap snaps off.
- Remove the cap, turn it 180° (4), latch it into the housing and close the cover.
- Radial actuation may reduce the mechanical life.
- The min. radius refers to a pivot at the top of the cap.
- Unused actuator entry slot must be covered by the plug.
- Do not use the switch as end stop.

Schutzvermerk nach DIN 34 beachten
Copyright reserved

18.03.2003

This copies will not be retreated incase of alternations.