Bernstein
Bernstein AG
Postfach 1164
D-32437 Porta Westfalica

Technical data sheet: AN-KAB.SHS 5M AC WINKEL

Safety hinge switch

Type: AN-KAB.SHS 5M AC WINKEL	Art.-No.: 325.1004.220	Date: 29.10.01

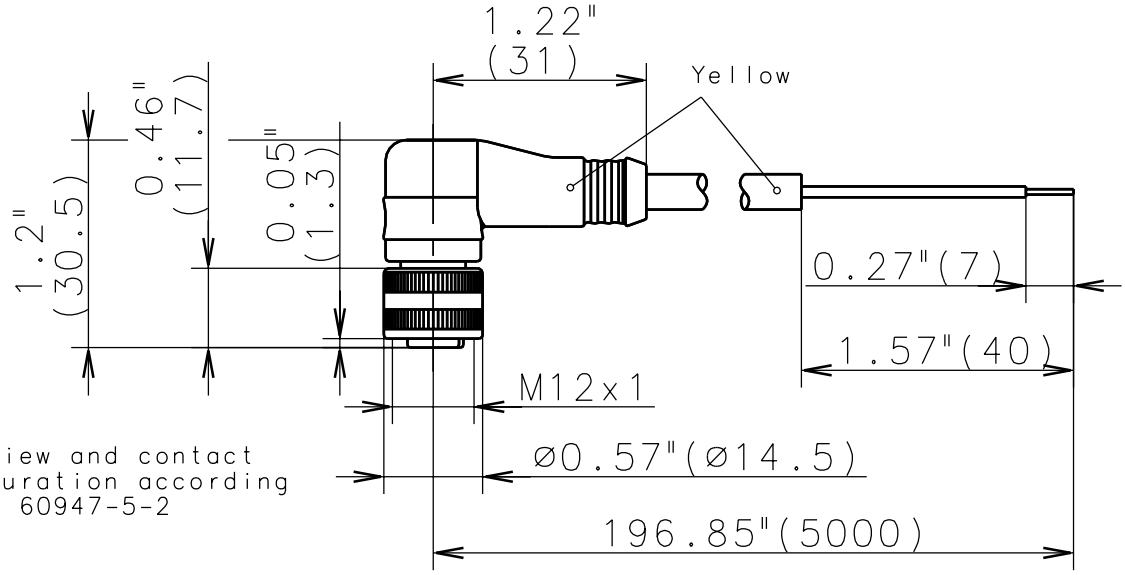

Face view and contact configuration according to IEC 60947-5-2

Pin No.	Wire
1	BN (Brown)
2	BK (Black)
3	BU (Blue)
4	GNYE (Green/Yellow)

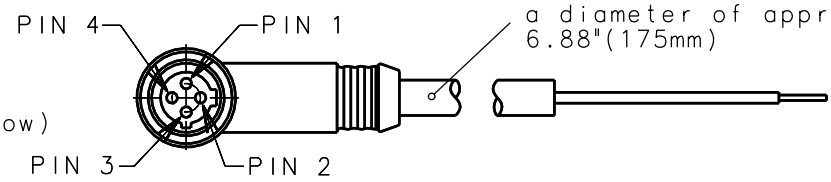

Cable to be coiled to a diameter of approx 6.88"(175mm)

Colour code of leads according to IEC 757

Mechanical features	Electrical features	Standards:
Polution degree: 3	Nominal Voltage: 250V/300V	IEC 60664-1
IP-degree of protection: IP68 (plug connected)	Rated current:4A	IEC 60512-3 Test 5b
	Insulation resistance :>$10^9\Omega$	IEC 60512-2 Test 3a
Temperature range: -25°C/+90°C	Rated impulse with-stand voltage: 2kV	IEC 60529
Mating torque of coupling nut: 100-150Ncm		
Min.single cable strand Ø: 0.34mm²		
Cable outer jacket 4x0.34mm²		
Material: PVC		
Jacket diameter: 5.0mm		
with selfsecuring coupling nut		
gaskets: O-Ring		

Safety instructions

Schutzvermerk nach DIN 34 beachten
Copyright reserved

29.10.2001

Copies are not retreated in case of alternations